Scheduling Techniques, Continued

"BAR CHART" METHOD

Development of a Bar Chart Schedule

Bar charting is a simple planning technique that is widely used on construction projects as an economic control tool. The schedule, essentially, plots progress by comparing the actual work completed to the work that was targeted (scheduled) to be completed. It is easily prepared and updated, and can be used as a stand-alone document.

Step 1. Chart Layout

The main portion of the bar chart schedule is comprised of a series of vertical columns to accommodate the entire project duration. On the left side of the chart are 2 columns, one for the individual construction activities, and the other for percentage of project completion. On the right side of the chart, following the last month on the schedule is a column for total dollars accumulated. The schedule is illustrated in exhibit A-1. This exhibit has been set up to represent a 4½-month project for the construction of a vehicle maintenance facility.

ACTIVITY	%	JAN	FEB	MAR	APR	MAY	$ ACCUM
STR EXCAV	100 -						- KT AMT
	90 -						-
CONCRETE	80 -						-
ROUGH CARP	70 -						-
	60 -						-
FINISH CARP	50 -						-
MECHANICAL	40 -						-
	30 -						-
ELECTRICAL	20 -						-
INSTRUMENT	10 -						-
	0 -						- 0

LEGEND:

BARS: TARGET ▬ ACTUAL ▒

'S' CURVE: TARGET ━ ACTUAL - - -

Exhibit A-1

Continued on next page

Scheduling Techniques, Continued

Step 2. Activity Identification

The second step breaks the project down into specific major activities, much the same as is done when setting up a CPM chart. Each activity is assigned a *duration*, which represents the length of time required to perform the activity. Somebody knowledgeable or experienced in construction determines the duration chosen. Duration is based on:

- Complexity of the work
- Volume of work
- Crew sizes available

The activities are normally placed on the chart in general order of precedence, with the earliest on top and the latest on the bottom. Next, the date that each activity can (or should) begin is determined, taking into consideration the submittal review time, material purchase and delivery, planned utility outages, and so on. An estimated dollar value (including material, labor, and equipment) for each activity should also be determined. The sum of the estimated values should equal the contract price.

Step 3. Activity Placement

The third step is to place the activities on the chart. List the activities according to the general precedence in which they are to start. Review the chart for coherent logic. If the relationship of one activity to another is unreasonable, adjust as necessary. Review the project duration for reasonableness. Exhibit A-2 illustrates the set up of the bar chart to this point. The numbers beneath the bars indicate the percentage of completion for each activity at the end of each month. This exhibit also includes the "S" curve, a standard feature of bar charts. The "S" curve will be discussed in step 4.

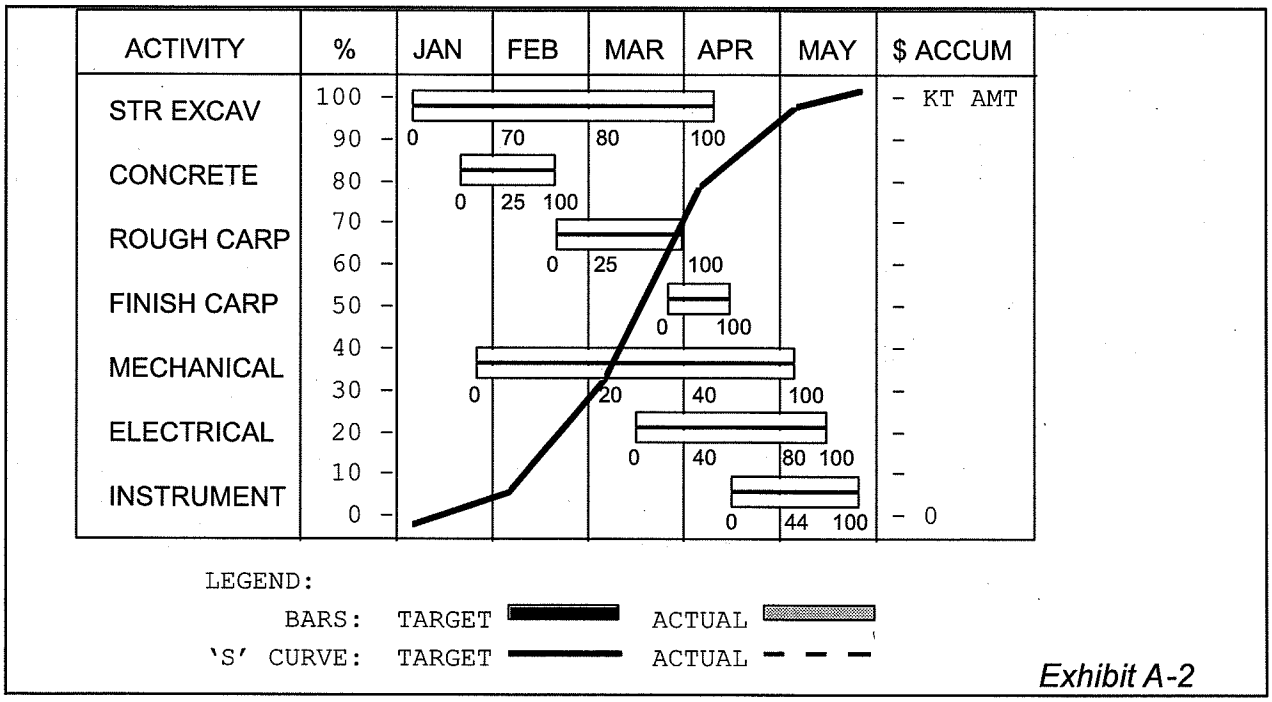

Exhibit A-2

Continued on next page

Scheduling Techniques, Continued

Step 4. Drawing the "S" Curve

The fourth step is to determine the accumulated percentage of project completion for each month of the project. As each point is plotted along the monthly axis corresponding to the accumulated percent complete, the lines between these points will generally take on a curve in the shape of an "S" when connected together. The accumulated percentage of completion is determined by:

- Choosing each monthly axis line and identifying the activities it crosses.
- The point in time where the monthly axis crosses the activity.
- Multiplying the percentage complete (in decimal form) by the estimated dollar value of each activity.
- The sum of these values added together and divided by the total contract value to obtain the accumulated percentage of completion.
- Plotting the value for each respective month and connecting the points.

Updating Bar Charts

The updating of bar charts is a simple process once the chart is put together. Each activity bar will have a space in which to draw in the actual progress each month. Updating the chart involves two steps.

Step 1. Determine Percentage of Project Completion

For each activity, determine the actual percent of completion. This is done by estimating the actual progress in the field. Sketch this percent on the top bar for each activity using hatched symbols. Sketch the planned (scheduled) percent complete on the bottom bar using a solid color fill. Exhibit A-3 illustrates an update to the bar chart, indicating progress as of the end March.

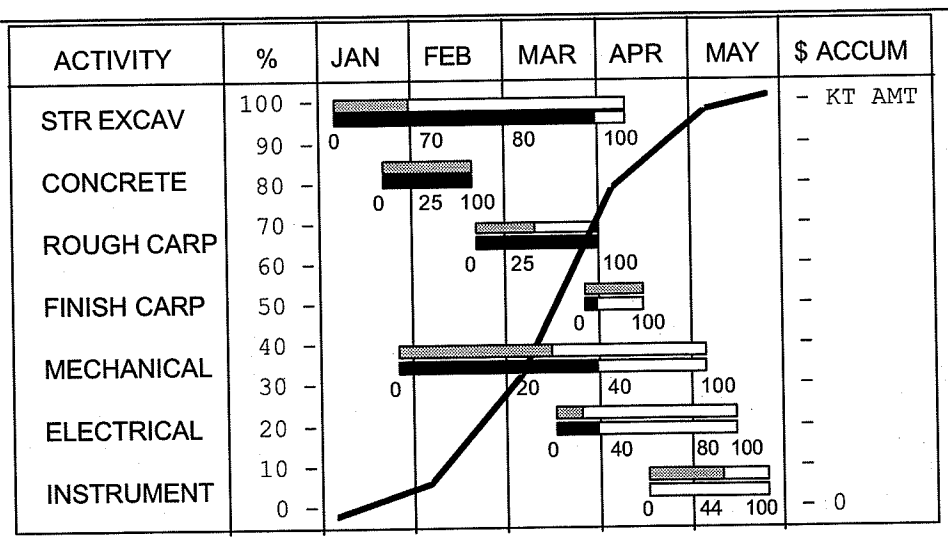

LEGEND:

BARS: TARGET ACTUAL

'S' CURVE: TARGET ACTUAL

Exhibit A-3

Continued on next page

Scheduling Techniques, Continued

Step 2. Draw the "S" Curve

Using the actual percentage of completion, follow the same steps outlined in step four. Use a different color line or style to plot the actual progress as opposed to the scheduled progress. Comparing the actual accumulated percentage with the schedule will readily inform you how far the contractor is behind or ahead of schedule. Multiplying the actual percent complete by the contract value will result in an amount known as work-in-place (WIP). Exhibit A-4 illustrates the placement of the updated "S" curve on the bar chart.

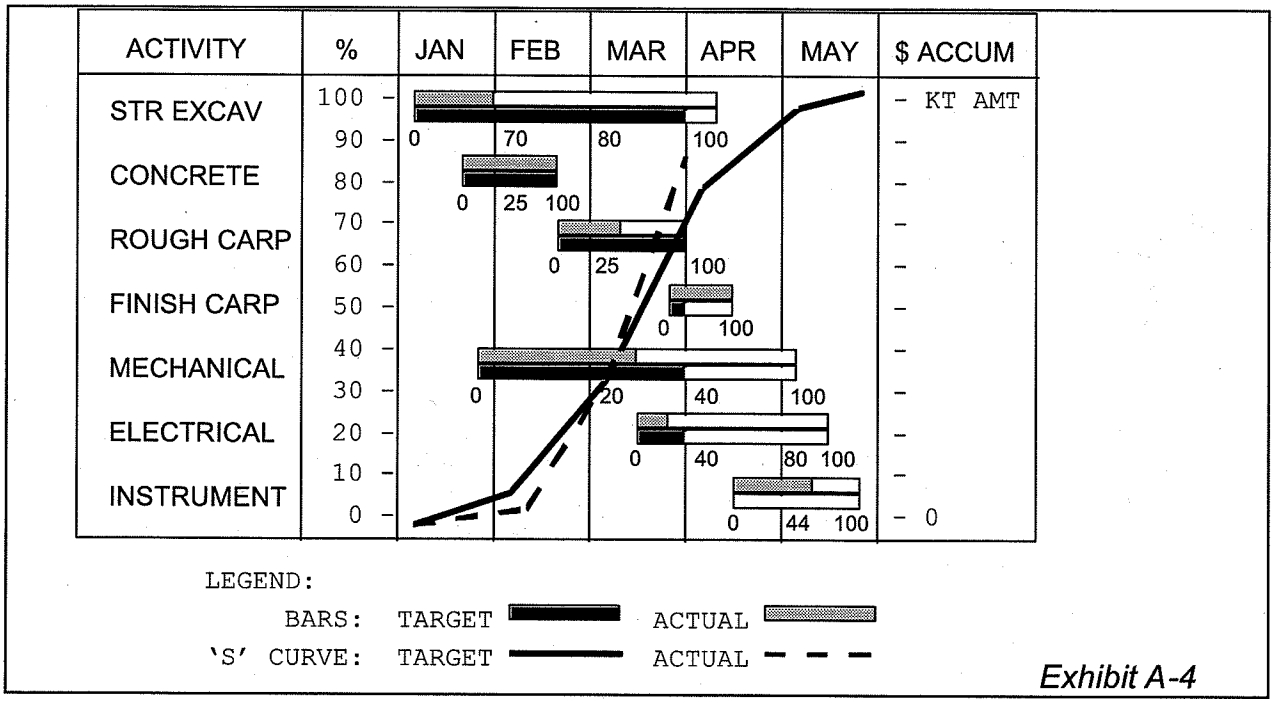

Exhibit A-4

"CRITICAL PATH" METHOD

Description

The Critical Path Method (CPM) of construction scheduling is typically used on more complex projects, when a simple bar chart is insufficient to indicate the relationship and interdependency of the individual construction activities. Every CPM schedule (also called a *network*) will have at least one path through the network that controls the overall project duration. This will be the route (also called a *pathway*) of longest combined duration through the diagram. This route is known as the *critical path*, since any delay in a construction activity on that path will result in an increase of the project's overall duration. For those activities not on the critical path, there exists some amount of flexibility as to when each one can start or finish without affecting the overall project duration. This flexibility is known as *float*. The amount of float for each activity can be calculated.

Continued on next page

Scheduling Techniques, Continued

The following paragraphs describe the process of setting up a CPM schedule. For purposes of this instruction, presume that you are administering a contract to construct a vehicle maintenance garage. The initial steps of the process (summarized in exhibit A-5) have been completed for you, including:

- Identifying all the individual construction activities,
- Establishing precedence (interdependency), and
- Determining activity durations.

PROJECT ACTIVITY LIST			
Activity	**Name**	**Duration**	**Depends On**
A	Mobilize	1 Day	START
B	Deliver Material	7	A
C	Excavate & Form Footings	6	A
D	Pour Footings	2	B, C
E	Rough Framing	5	D
F	Rough Electrical	2	E
G	Install Door & Window	1	E
H	Install Roof	3	E
I	Install Siding	3	H
J	Paint Interior	2	F, G
K	Finished Electrical	1	J
L	Paint Exterior	2	G, I
M	Cleanup	1	K, L, N
N	Construct Driveway	3	D

Exhibit A-5

The next step is to transform this information into a graphic representation of the schedule. This graphic display will show the interdependency of the activities much more clearly. There are three basic principles that govern the construction of a CPM schedule:

Principle One: Activities are shown as boxes.

Occasionally, CPM charts are set up with arrows and nodes. The arrows represent individual construction activities, and the nodes (which connect a series of arrows) represent points in time at which *events* occur. These events are usually the beginning of construction activities.

More often, CPM charts are set up with boxes and arrows. The boxes (also called *activity blocks*) represent individual construction activities, and the arrows are used to connect the activities in a logical sequence. The boxes contain information regarding the duration and timing of the activity. Exhibit A-6 shows a typical construction activity block. Each of the items in the block will be explained in detail later in this appendix.

Continued on next page

Scheduling Techniques, Continued

Activity No.	Duration	
ES	Description	EF
LS		LF

Exhibit A-6

Principle Two: All activity depends upon and cannot begin until the completion of all preceding activities.

This principle strikes at the heart of the CPM schedule technique. The relationship between the various construction activities determines the *precedence* in which they are to occur. The CPM network is established by determining the precedence of all the activities. This is shown graphically by connecting the activity blocks with arrows. For example, the table in exhibit A-5 indicates that activity "B" (deliver material) cannot begin until activity "A" (mobilize) is completed. In the CPM network, this would be shown by drawing an arrow from block A to block B.

Each construction activity is identified by using an event number in the upper left corner of the activity block. No more than one activity may have the same activity number. The assigned activity numbers should increase as progress moves from one activity to the next throughout the network. Activities should be numbered with gaps, allowing for additional activities to be inserted later (should changes occur) while maintaining numerical order.

Using this principle, the construction schedule for the vehicle maintenance garage project would look like the CPM network illustrated in Exhibit A-7. Notice that each activity is placed on the schedule according to the precedence established in exhibit A-5, and that the activities have been assigned numbers (1000, 1010, 1020, etc.) to replace the letters previously assigned (A, B, C, etc.).

Principle Three: All activities begin and end at some point in time.

The scheduled start and finish dates of each construction activity are shown on the activity block. The item denoted as "ES" indicates the *early start* date, which is the earliest point in time when that particular activity could occur. While in reality the activities begin at the start of a particular day, the "ES" date is shown as the *end of the previous day*. For example, the first activity in any project actually begins at the start of day #1, but it is shown on the CPM as beginning at the end of day #0. Next, the *early finish* ("EF") is calculated by adding the activity duration to the early start date. Thus, for the vehicle maintenance garage, activity 1000 (mobilization) has an early start date of 0 (the activity starts at the end of day #0) and an early finish date of 3 (the activity is completed at the end of day #3).

The early start for the remaining construction activities are determined by examining the precedence of the activities. The early start date for a particular activity is the largest of the early finish dates for all prior activities. For example, activity 1030 (pour footings) has an early start date of 8 (the larger of the early finish for activities 1010 and 1020).

Continued on next page

Scheduling Techniques, Continued

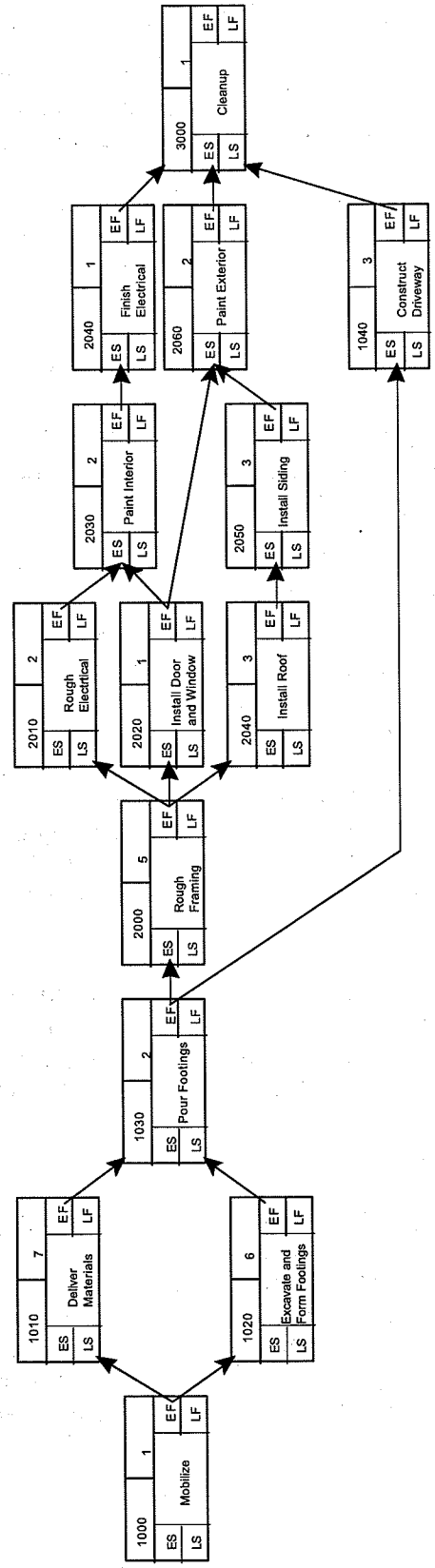

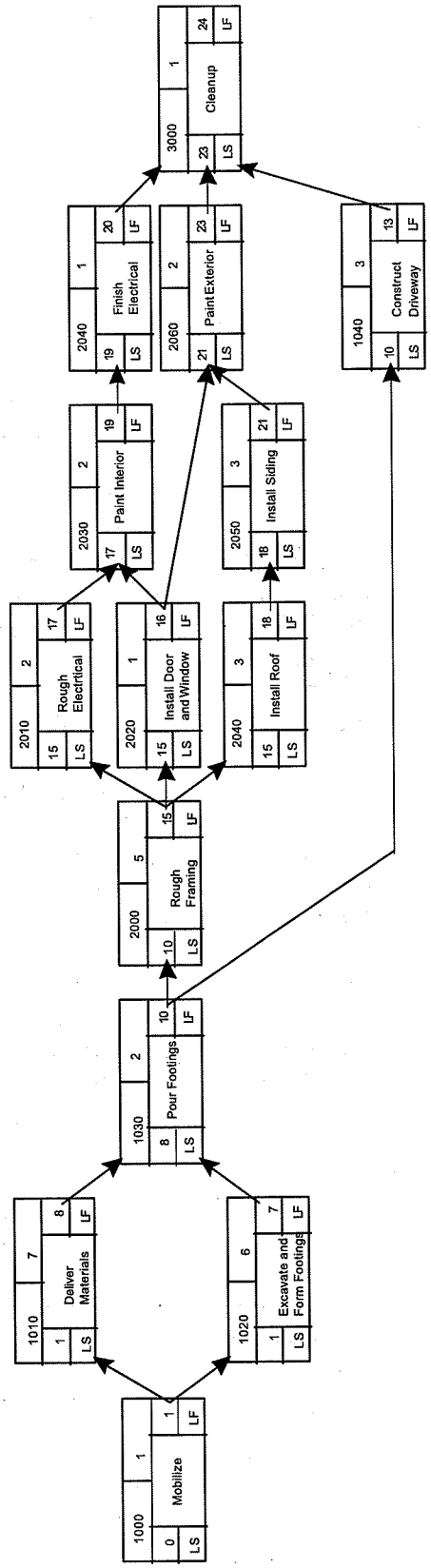

Scheduling Techniques, Continued

Proceed through the network, determining the early start and early finish dates of each construction activity. This is known as a *forward pass*, because calculations are performed as you move forward in time through the project. The early finish date of the final construction activity is known as the *project duration*. It represents the total length of time required to complete the project. The results of the forward pass for our vehicle maintenance garage are shown in exhibit A-8. The project duration is 24 days.

CPM Network Calculations

One of the advantages of CPM scheduling is that it provides the ability to determine the:

- Earliest date the project can be completed,
- Latest date the project should be completed if no changes occur,
- Impact on the project completion date of delaying a specific activity, and
- Critical activities for completing the project on or before the completion date.

These aspects of the project schedule are determined by making 3 basic computations, one of which is the forward pass discussed in principle #3. The next computation used in CPM networks is the *backward pass*, which is similar to the forward pass, but is used to determine the *late start* ("LS") and *late finish* ("LF") dates for the various construction activities. The late finish date represents the latest an activity can finish without changing the project completion date

To begin the backward pass, the last activity in the network is assigned a late finish date equal to the early finish date. The late start date is then calculated by subtracting the duration from the late finish date. In our vehicle maintenance garage project, the last activity (cleanup) has an early finish on day #24. Therefore the late finish is also 24, and the late start is 23.

The late finish for the remaining construction activities is determined by examining the precedence of the activities. The late finish date for a particular activity is the smallest of the late start dates for all follow-on activities. For example, activity 2020 (install door and window) has a late finish date of 20 (the smaller of the late start for activities 2030 and 2060). The results of the backward pass are shown in exhibit A-9.

Critical Path

In the final network, there are a number of pathways of construction activities leading from the beginning to the end of the project. On at least one of these paths, all the activities will have ES dates equal to their LS dates. This is called the *critical path*. It is nothing more than the longest path through the network based on the activity durations and their logical relationships (precedence). The critical path determines the project duration. Any change in duration on an activity along the critical path will affect the project completion date. The critical path in our vehicle maintenance garage is shown in exhibit A-10.

Continued on next page

Scheduling Techniques, Continued

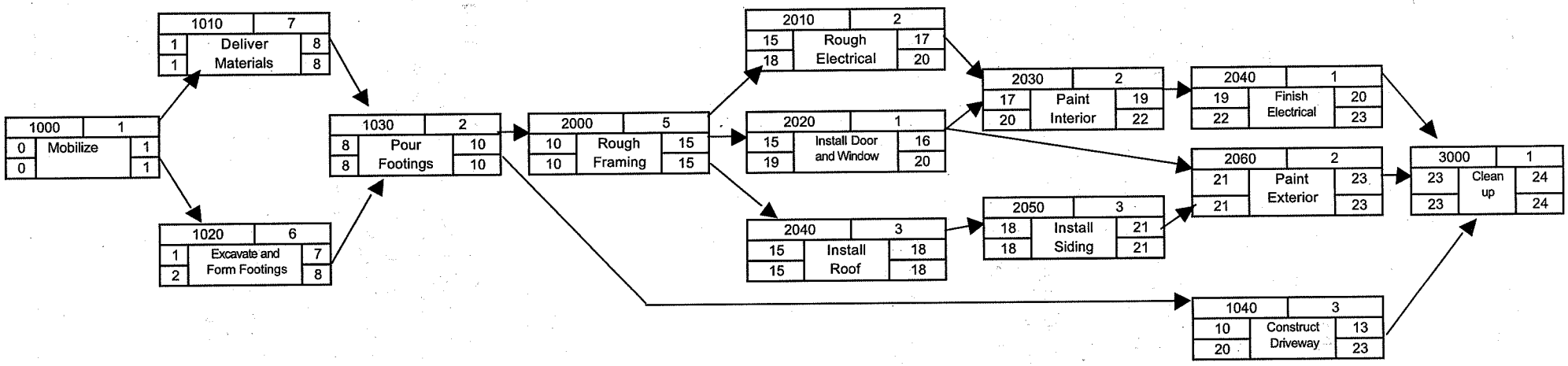

EXHIBIT A-9

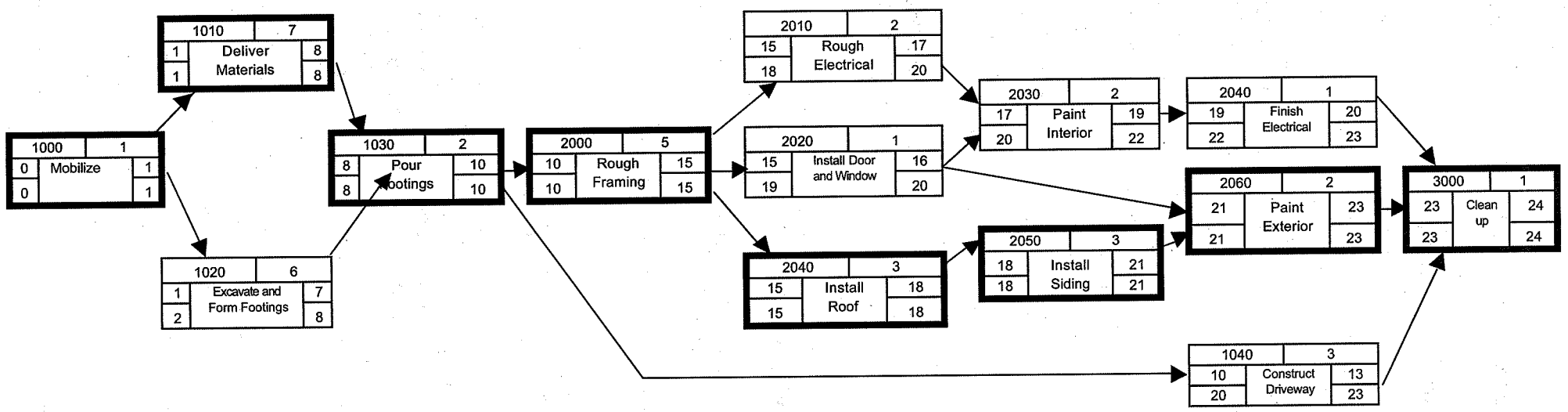

EXHIBIT A-10

Continued on next page

Scheduling Techniques, Continued

Determining Free Float and Total Float

The third computation used in CPM scheduling is the determination of *float* time. Activities not on the critical path have some amount of flexibility as to when they can be performed. The activity may actually start later than its scheduled ES date without changing follow-on activities or the overall project duration. This amount of flexibility is known as *float*. There are 2 kinds of float:

- Total float is the number of days an activity can be delayed without affecting the overall project duration. It is calculated by subtracting the early start date from the late start date. For example, activity 2020 (install door and window) has 4 days of total float.
- Free float is the number of days an activity can be delayed without affecting the early start date of the next follow-on activity. It is calculated by subtracting the early start of the follow-on activity from the early finish. For example, activity 2020 (install door and window) has 1 day of free float (compare EF for 2020 with ES for 2030).

All activities on the critical path have zero float. All non-critical activities may have float ranging from zero to a high of one less than the project duration.

Summary of CPM Calculations

Early Finish = Early Start + Duration
EF = ES + DUR

Late Start = Late Finish - Duration
LS = LF - DUR

Total Float = Late Start - Early Start
TF = LS - ES

Free Float = Early Start (Next Activity) - Early Finish
FF(x) = ES(x+1) - EF(x)

The process of calculating these dates, although not difficult, can be time consuming and tedious if done manually. Fortunately, the development of personal computers has offered some relief in performing much of this task. The only information that you need to input into the computer is the activity name, duration, order of precedence, and the earliest start date for the project. On the basis of this information, the computer will calculate all of the start dates, finish dates, float, and the critical path.

Conclusion

Remember, the network is only as good as the information used in developing the network. The true value of a network diagram is measured in the accuracy in identifying activities, estimating their durations, and determining their order of precedence.

Continued on next page